Hyundai Kona: Dual Clutch Transmission Control System / Input shaft speed sensor 2 Repair procedures

Removal

1. Remove the cleaner assembly and air duct.
   (Refer to Engine Mechainical System - "Air Cleaner")
2. Disconnect the Input shaft speed sensor connector (A).
3. Remove the battery and battery tray.
   (Refer to Engine Electrical System - "Battery")
4. Remove the ECM.
   (Refer to Engine Cotrol System - "ECM")



5. Remove the clutch actuator.
   (Refer to Dual Clutch Transmission Control System - "Clutch Actuator")
6. Remove the input shaft speed sensor (A).
   Tightening torque :
   9.8 - 11.8 N.m (1.0 - 1.2kgf.m, 7.2 - 8.7 lb-ft)

transmissionmanuals.com

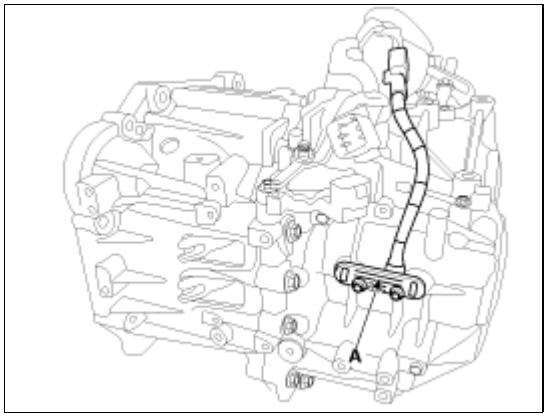

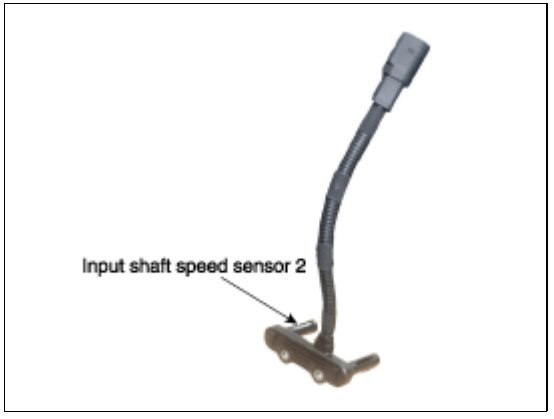

Installation

1. To install, reverse the removal procedure.

NOTICE

- Before installing the input speed sensor, check the assembled state of the O-rings (A) and shuold apply gear oil to surface of O-rings.

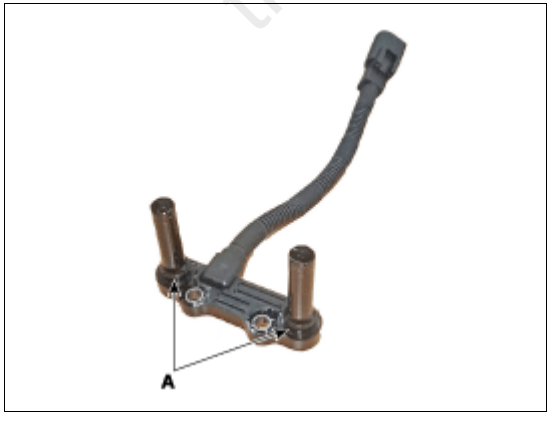

transmissionmanuals.com